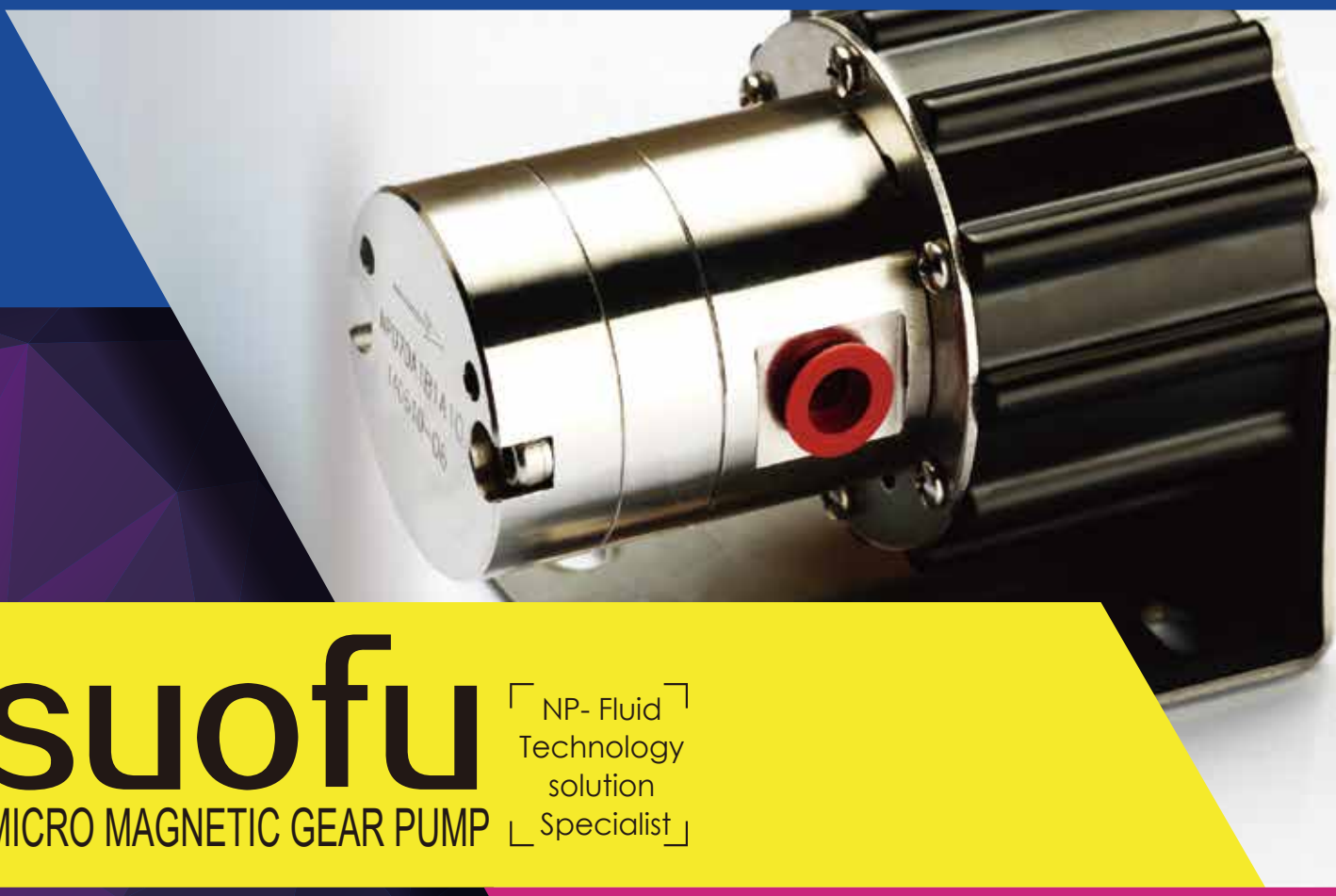

suofu

MICRO MAGNETIC GEAR PUMP

NP- Fluid
Technology
solution
Specialist

suofu 索 富
Your faithful partner

Company profile

Founded in 2010,Shanghai Suofu Co., Ltd is an innovation-driven and market-oriented company which designs and manufactures high precision micro magnetic drive gear pumps. We focuses on providing world-leading products and services to customers worldwide.

Suofu is a National High-Tech Enterprise. We have professional R&D and Sales Team in Shanghai and Production Facilities in Fujian Province. The whole NP Series products are CE, RoHS,REACH, and ISO 9001:2015 Cetificated We have a full set of advanced technologies such as special material application, professional styledesign, high-precision processing, one-time injection molding, precision assembly, and testing.Until today,we haveobtained 24 patents .

Suofu has mature and professional teams of R&D ,design,engineering,testingandmanufacturing,withmorethan20 years' experienceinfluid transmission,structuralmechanics,systemdynamicsmaterial machining and forming, and power system protection.Customized services can be adjusted andexpanded at any time according to customer demands.Today,we deliver our products for customers worldwide and highly support our customers fron pre-sales installation to after-sales maintenance everywhere.

The NPseriesHigh-performance pumpsprovidprecise andpulseless flows.Featuring Suofu's patented cavity profile design,NP Series pumps have the advantages of High-Pressure,Proven Reliability,Abrasion Resistance,Chemically Resistant,Strong Self-priming,Strong Dry RunningAbility and Long Service Life.

Our mission:"Your demands are our duties."

Corporate culture

Our purpose is making value for our customers, employees and shareholders by providing high quality products and service to customers.

Enterprise Vision:

Continual improvement

Pursuit of excellence

Base on facts

Welcomes competition

Enterprise qualification

Suofu's production base is a national high-tech enterprise and Sanming micro gear pump engineering technology research center in Fujian Province.

Suofu micro magnetic gear pump engineering technology project entered the national finals of China Innovation and entrepreneurship competition and won the provincial second prize,All of our product series have got CE Marking and RoHS Certification, and meet the requirements of ISO9001:2015.

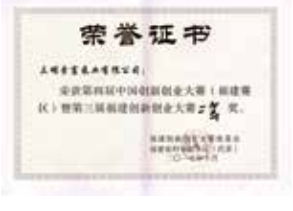

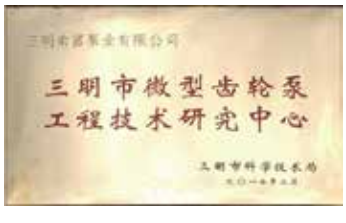

Product Development

Before the development of each new product,our R&D team alwasys do in-depth study on all the target markets to get great understanding of what is acctually demands from the potential customers.Then,we ensure that the technical parameters and type of our products are exactly in accordance with the expectation oof the markets.

Years market analysis experience have endowed our R&D team with the expertise of pump features and clear understanding of the stregths and weaknesses of the current products in the market. Therefore, we can accurately identify the key points of technological breakthroughs,rendering our product development and technology innovation pertinent and applicable. All of the core technologies involved, from design to manufacturing,are innovated by ourselves and protected by intellectual property rights.

We have established a large database of friction characteristics of numerous olymers and special materials. Such a database allows our R&D team to rapidly propose the appropriate engineering solutions to different demands.

Quality assurance

Our quality system is according to ISO9001:2015.

The quality of products is the cornerstone of our company. Each of our employees comes to work here with a will: we must produce the best pumps in the world.

To achieve an effective quality assurance, we assign a unique ID to each of the pumps produced, which facilitates the after-sales quality tracking. Our quality inspectors perform the noise test, vibration test, wear resistance test,flow test,pressure test, pressure resistance test, and energy consumption test. Only those that pass through all the seven tests are allowed to be delivered to customers. Besides the standard quality control, other tests can be done if demanded to ensure that the products work well in various conditions.

We believe that the quality assurance ultimately depends on our employees, and we are so proud to have brought highly professional and responsible minds to join us, who form a stable quality assurance team that accompanies the development of Suofu from the very beginning.

Applications

NP series micro magnetic drive gear pumps are ideal for fluid transfer at a flow rate from 2 ml/min to 65000 ml/min. Our products have been applied in systems including fluid transfer,lubrication, sampling, spraying, dispensing, printing, pressurisation, filtering, washing, circulation,cooling, coating, painting, and metering.

NP series micro pumps can work under different conditions when coupled with different types of motors: with BLDC motors (controller integrated)the pumps can be applied in narrow working places; with explosion proof motors the pumps can be applied in flammable or explosive atmosphere; with speed control motor, like BLDC motor, AC invert motor or servo motor, the pumps can be applied in metering systems that require accurate speed control.

NP series micro pumps have been used as an important part of aeronautical equipment, IC test equipment, lithography machines, cooling equipment, production lines for lithium batteries, hydrogen production equipment for methanol decomposition, boilers, medical and biotechnological equipment, water treatment equipment, selective catalytic reduction (SCR) systems, dedicated outdoor air systems, heat recovery systems, various special laboratory equipment, industrial / individual washing machines, and sprayers.

Throughout years of collaboration, we have established long-term partnership with some leading academic institutions and companies including Chinese Academy of Science, Zhejiang University, Shanghai Jiao Tong University, National University of Singapore, University of Helsinki, University of Iceland, Netherlands Institute,Danfoss, KSB, SerEnergy A/S, Haier Group, Samsung Heavy Industries, CATL and etc...

NP SERIES INSTALLATION, OPERATION, SAFETY & WARRANTY INFORMATION NP

WARNING

- Gear pumps can produce high differential pressure that may cause system damage and on-site personal be injured due to unintentional release of fluid. Operating conditons that exceed design limits may burst the pump or damage the motor.
- The pump head and motor & drive are designed to operate together. Before any disassembly, cut off the power to the motor and release pressure of the pump head.
- Do not pressurize or operate the pump unless the pump/motor assembly contains a complete set of correctly installed fasteners in good condition. Each port hole must contain a fastener.
- Do not operate the pump/motor unless it is secured in its desired location.
- Do not allow the pump to be subjected to an internal pressure (measured at either suction or discharge ports) approaching its burst pressure of 30 - 40 bar at room temperature. Specific codes, standards, operating practices, and conditions may dictate a lower internal pressure (higher safety factor). Verify leak-tight installation of fluid connections before operation where leakage could be hazardous.
- The temperature of the fluid to transfer should not exceed 150℃. A higher fluid temperature can reduce the pump's pressure bearing.
- The pump should not be used if the meidum causes corrosion to the pump seals, the pump body or other parts.Such conditions will cause a significant reduction the ability of pump to contain pressurized fluid and may cause potential leakage.

suofu 索 富
Shanghai Super Fluid Industrial CO.,LTD.

Add Room 723,No 1855,Caoan Road, Jiading district, Shanghai
Web site www.s-fluid.com
Tel +86-13764319509 +86-21-69002556
Email lqx@s-fluid.com

/For electric motors in general/

- In normal operation, the heat generated by the electric motor may burn the skin. The heat was produced by the electric motors must be released in time.Do not let them are accumulated in surroundings.

Unless otherwise specified, the electric motor will not be operated continuously without overheating at its published performance limit at an ambient (air) temperature not exceeding 40°C (104°F).

- Pay attention to the degree of protection of the motor, and do not let the motor work in an environment that exceeds this degree.
- Electric motors are not liquid-tight and should not be exposed to sprays, splashes, drips, or immersion, nor should they be exposed to the weather.
- Do not block motor ventilation openings (if present). Do not allow objects to be entered into motor.
- The motor must be cut off from power supply immediately if any conditions prevent the motor rotation.

/Particularly for AC motors/

- AC motors are only allowed to operate when the power source(s) (voltage and frequency) specified on the motor nameplate.
- Connect dual voltage motors to power source according to connection diagram on motor nameplate.
- The motor with overheating protection (see motor nameplate) automatically stops working in the event of overheating; However, the motor will restart to work without warning when winding temperature falls below the protection setting,unless the motor has been cut off from the power source.The motor cannot be relied on for overheating protection as routinely control motor,it is only used as safety protection measure.

/Particularly for Brushless DC (BLDC) Motors

- BLDC motors control the speed of the motor by controlling the input voltage.Do not operate motor beyond the allowable input voltage. (see nameplate).
- Regardless of whether the in put voltage is high or low,the motor current is not allowed to exceeded the setting motor current at any ciecumstances. The voltage fluctuation should not be exceeded 15% of the setting input voltage.Otherwise, the motor will be damaged permanently.
- If the motor has a potentiometer speed adjustment,can rotate the potentiometer clockwise to the stop position before starting,and then rotate countreclockwise until the required working speeed.

suofu 索富
Shanghai Super Fluid Industrial CO.,LTD.

Add Room 723,No 1855,Caoan Road, Jiading district, Shanghai
Web site www.s-fluid.com
Tel +86-13764319509 +86-21-69002556
Email lqx@s-fluid.com

INSTALLATION

- Pump Installation & Plumbing: Install the pump as close and below the liquid source as possible. Suction and discharge lines should be as large as the pump ports and as short as possible. If suction runs are required for a long time, use larger tubing. Avoid any restrictions; valves, elbows, or sharp turns whenever possible to avoid loss of floor performance.
- Fitting Installation: Apply a paste-type thread sealant or Teflon®tape (two wraps maximum) no more than three threads from the end of the fitting before assembling to pump ports. Tighten fittings no more than five total turns and no more than two turns beyond finger-tight, whichever is less.Take care not to damage or misalign the pump head when installing the fittings.Hold the pump head by hand while tightening the threads with a wrench.
- Filters: On the suction side, a filter of 20 microns or higher is desirable. If the system is closed-loop recirculating, the filter can be placed on the discharge side. The smallest micron filter should be used without restricting flow or performance.

OPERATION

- Magnetic Coupling: Magnetic coupling makes the "zero leakage" feature possible. It also offers protection from damage caused by excessive pressures or foreign particles wedged in the gear teeth. Decoupling occurs when the two magnets are forced out of pole-to-pole alignment.

  If the pump decouples, the motor may continue to operate at no-load speed,but the pump's gears will stop rotating.

  To recouple, please stop the motor completely then restart. If decoupling persists, check the system for excessive pump pressure. If it doesn`t work, the pump has to be disassembled for checking foreign particles wedged in the gear teeth. Disassemble and clean parts thoroughly following repair procedure.

  After reassembly, please rotate the motor fan to ensure that pump and motor are able to rotate freely with no magnetic rub or internal friction.
- Operating pressure: The differential pressure across the pump should be set well below the decoupling pressure, which can prevent inadvertent decoupling caused by transient pressure surges.
- Self-Priming: NP pumps are capable of self-priming. If the gears are "wetted" before running, the pump's life can be much longer than totally dry.
- Dry Running: NP pumps can last more than 100 hours' dry run under 1000rpm, but running dry will reduce the pump's life, especially in high speed.
- Running in Reverse: The standard design of NP gear pumps requires that the pump be run in a clockwise rotation. Intermittent reverse rotation for purging is acceptable. If you need continuous reverse rotation (counter-clockwise), contact the company for particular models please .

NP PUMP'S INTERNAL STRUCTURE

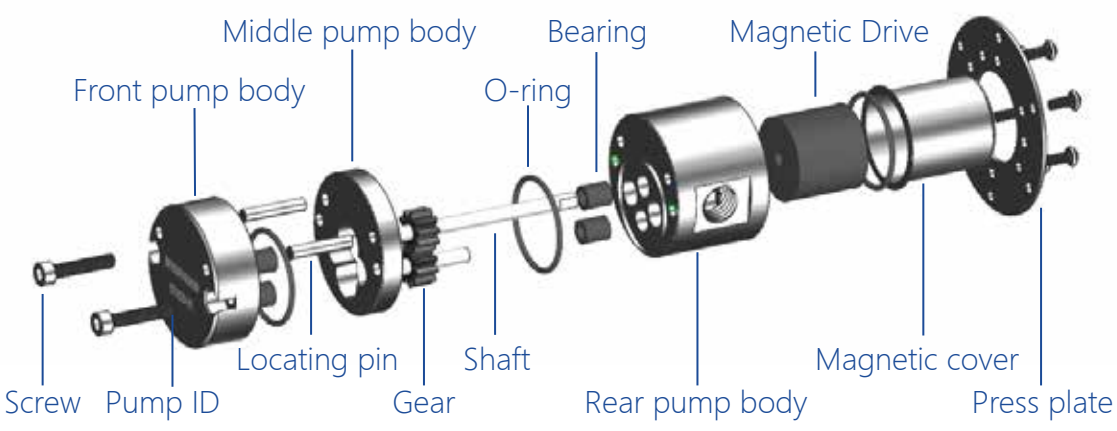

To develop NP series pumps, we integrate distinctive gear tooth profile and pump cavity profile with classical structures of the external gear pump. Compared with standard profile, our patented tooth profile guarantees far less sliding when the gear are meshing, thus greatly reducing the gear abrasion; the special cavity profile design of pump makes NP pumps well adaptive to different working pressure and different rotation directions, leading to a nice balance between efficiency and pump service life.

Gears and bearings are the main wearing parts of our pumps. By adopting as material the specially reinforced PEEK and comes from precision injection molded, we largely improve the service life of these parts.

The gear's working face is made through one-step injection molded free of mechanical processing. This method ensures structural integrity and compactness, and enhances the wear resistance. The innovation of ceramic shafts further improves the pump's overall rigidity and wear resistance.

We can provide ceramic wear plates, ceramic gears, metal gears or harden coating for abrasive fluid transfer.

The fluids can go through several internal channels to lubricate and cool the bearings and the magnetic coupling when the pump running.

The rare-earth elements are selected as the pump magnetic coupling, providing high torque to the pump shaft and eliminating the risk of decoupling. Our magnetic drive can work safely and smoothly for a long time if the temperature no higher than 150 ℃.

To prevent the magnetic coupling from corrosion by the pumped liquid, we enclosed the driven magnet tightly with PPS. PPS's corrosion resistance is close to PTFE (Teflon).

The magnetic driven structure guarantees that all the rotational parts are entirely enclosed inside the pump body, leading to a perfect dynamic seal. Three O-rings create a reliable confined environment within the pump.

PERFORMANCE FEATURES

Series	Type	Nominal flow rate
42 Series	NP020	0.2ml/rev
	NP039	0.39ml/rev
	NP060	0.6ml/rev
	NP070	0.7ml/rev
51 Series	NP100	1ml/rev
	NP120	1.2ml/rev
	NP170	1.7ml/rev
	NP190	1.9ml/rev
60 Series	NP240	2.4ml/rev
	NP350	3.5ml/rev
98 Series	NP400	4ml/rev
	NP600	6ml/rev
	NP900	9ml/rev
	NP1200	12ml/rev
	NP1700	17ml/rev
106 Series	NP2600	26ml/rev

Product Features

- Wide range of temperature
- High pressure resistance
- Wear resistance
- Chamically resistance
- Low operational noise
- Strong Self-priming
- Long service life
- Dry-running for long time
- Pulseless & Smooth delivery

INTERNAL STRUCTURE OF 42/51 SERIES PUMPS

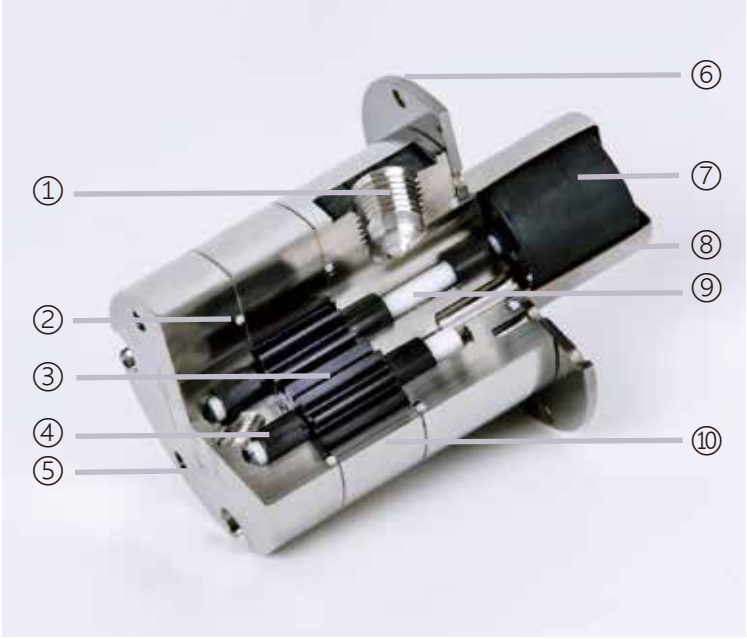

①Internal threads of sizes NPT,G,ZG (RC) –1/8″,1/4″,3/8″,3/4″
②O-rings made of FKM/EPDM/PTFE/FVMQ/CR/In/PTFE+SS316
③Specially reinforced PEEK gears
④Specially reinforced PEEK bearings
⑤Unique pump ID
⑥Cover plate made of SS316 or other alloys
⑦Rare-earth magnetic drive entirely enclosed by PPS
⑧Magnetic containment made of SS316 or other alloys
⑨High-precision zirconia ceramic shafts
⑩Pump body made of SS316 or other alloys

INTRODUCTION OF NP SERIES PUMPS

NP series micro magnetic gear pump only has O-ring static seals, and there is no leak-prone dynamic seals. Gears and bearings are in special reinforced PEEK,while shafts are in high-precision ceramic. One-step injection-molded gears, and special gearstyle designs with independent intellectual property rights to guarantee that NP series have ultra-long service life and abrasion resistance.It is ideal for small-flow, high-pressure and pulseless applications requiring excellent chemical and abrasion resistance.

PRODUCT FEATURES

Special design of gear profile

- Our patented gear profile guarantees less relative displacement when the gear are meshing, thus greatly reducing the gear abrasion.

Special cavity design

- Our special cavity design can adapt to various differential pressures and rotation directions.

Pulseless exit pressure

- High precision parts and appropriate structural design ensure the smooth delivery.

One-step Injection-molded gears and bearings

- The gear's working face is one-step injection molded without mechanical processing, ensures structural integrity & compactness, and improves wear resistance & service life.

High precision ceramic shaft

- We use the high precision ceramic to make gear shafts. The ceramic shafts can make pumps are anti-abrasive and rigidity, bringing NP pumps a longer service life under high differential pressure.

Reliable Dry-running capability

- In applications that require the use of pump inlet vacuum to suck the medium into the pump, NP series can provide reliable dry running performance, and the pump will not be damaged by dry running during the self-priming process.

Various motor options

- We can provide AC motor/Explosion-proof motor/Frequency conversion motor/DC motor/BLDC motor/Stepper motor or servo motor.

PRODUCT SPECIFICATIONS

- Displacement: 0.2ml/rev~26ml/rev
- Flow rate: 2ml/min ~ 65000ml/min
- Working Speed: 1 ~ 4000rpm
- Pressure resistance: 25 ~ 40Bar
- Differential pressure: 20 ~ 30Bar with pure water flow
- Provide smooth and pulseless differential pressure
- Fluid temperature: -85°C-150°C
- Service life: 20,000+ hours (>10bar)/30,000+hours （<7bar)
- Self-priming lift: Up to 4m in completely dry running condition
- Suction vacuum lift: 8.2m
- Continuous dry running capability
- Inlet vacuum:Up to -0.85Bar
- Fluid viscosity: 0.2-15000cps
- Low operational noise

MATERIALS

Pump Body	SS316 stainless steel/ Hastelloy® /Other Alloys/Special Plastics
Gear	High-quality and specially filled PEEK /ceramics (optional)
Magnetic Drive	Rare-earth elements entirely enclosed by PPS
Bearing	Specially filled PEEK
Shaft	High-precision zirconia ceramic
O-ring	FKM/EPDM/Polytetrafluoroethylene(PTFE)/FVMQ Rubber/Neoprene(CR)/Indium
Port size	NPT、G、ZG (RC) —1/8",1/4",3/8",3/4" or other customized standard sizes

ELECTRIC MOTORS

BLDC motor

Voltage	Power	Speed	Acceptable environmental temperature	Control	Driver
12V-48V	40W-1500W	100-3500rpm	-45~75°C	0-5V/PWM/anual control through knobs	Internal / External

AC motor

IEC standard motor		NEMA standard motor	
Normal with frequency converter	Frequency converter and explosion -proof	Normal with frequency converter	Frequency converter and explosion -proof

Servo motor

We provide servo motors of different brands

suofu 索富
Shanghai Super Fluid Industrial CO.,LTD.

Add Room 723,No 1855,Caoan Road, Jiading district, Shanghai
Web site www.s-fluid.com
Tel +86-13764319509 +86-21-69002556
Email lqx@s-fluid.com

suofu 索 富
Your faithful partner

NP-42 SERIES APECIFICATIONS

-Shanghai Super Fluid Industrial Co.,Ltd-

42 SERIES INCLUDES NP020, NP039, NP060, NP070

42 NP series micro magnetic gear pump only has O-ring static seals, and there is no leak-prone dynamic seals. Gears and bearings are in special reinforced PEEK,while shafts are in high-precision ceramic. One-step injection-molded gears, and special gear style designs with independent intellectual property rights to guarantee that NP series have ultra-long service life and abrasion resistance.It is ideal for small-flow, high-pressureand pulseless applications requiring excellent chemical and abrasion resistance.

- **Material**: Pump Body: SS316 stainless steel/ Hastelloy® /Other Alloys/Special Plastics
  Gear: High-quality and specially filled PEEK /ceramics (optional)
  Magnetic Drive: Rare-earth elements entirely enclosed by PPS
  Bearing: Specially filled PEEK (one-step injection molded)
  Shaft: High-precision zirconia ceramic
  O-ring: FKM/ EPDM / Polytetrafluoroethylene(PTFE) / FVMQ Rubber / Neoprene(CR) / Indium
- **Gear type**: Spur gear: better for differential pressure >7bar
  Helical gear: lower operational noise and fewer pressure pulsation
- **Service life**: 20,000 hours+ (>10bar)/30,000hours+ (<7bar)
- **Inlet filter**: 400 meshis better
- **Inlet vacuum**: -0.85Bar(related to the motor speed)
- **Differential pressure**: 20Bar(with pure water fluid)
- **Pressure withstanding**: 30Bar
- **Motor**: BLDC/AC/Servo/Stepper motor
- **Operational noise**(at a speed of 2000rpm): less than 55 dB for spur gears
  less than 45 dB for helical gears
- **Working Speed**: 1~4000rpm
- **Fluid temperature**: -85~150℃
- **Dry running time**: 100 hours @1000rpm(Max)
- **Ports**: NPT 1/8",or other customized sizes

PRODUCT PERFORMANCE CURVE（WATER、20℃）

NP020 performance curve

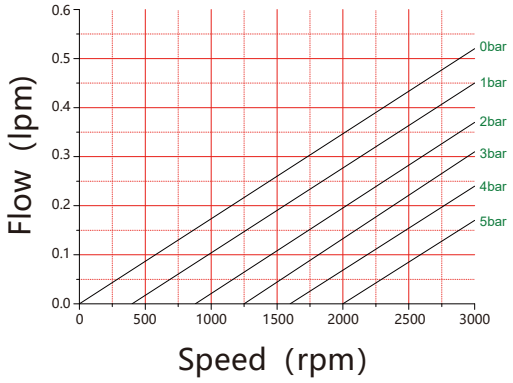

NP039 performance curve

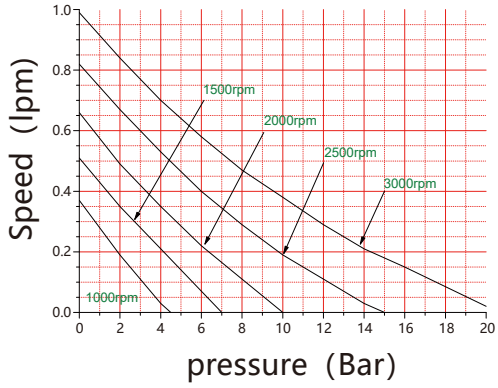

NP060 performance curve

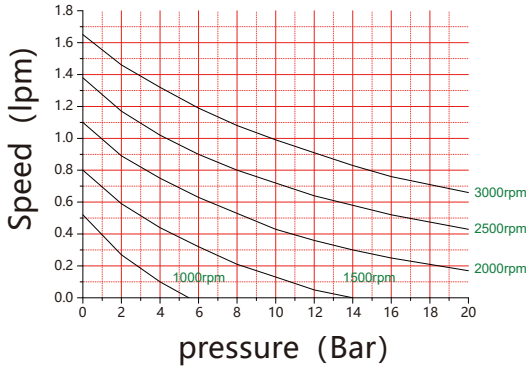

NP070 performance curve

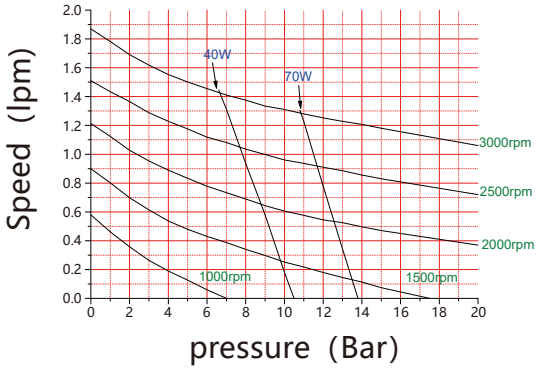

PUMP DIMENSION

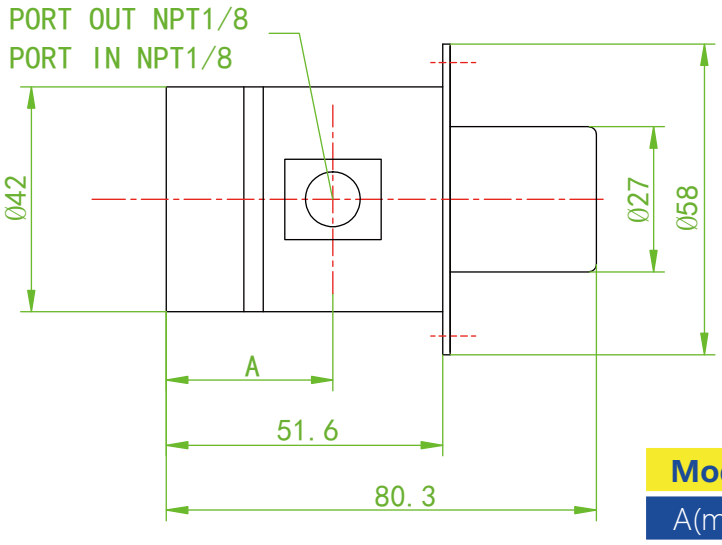

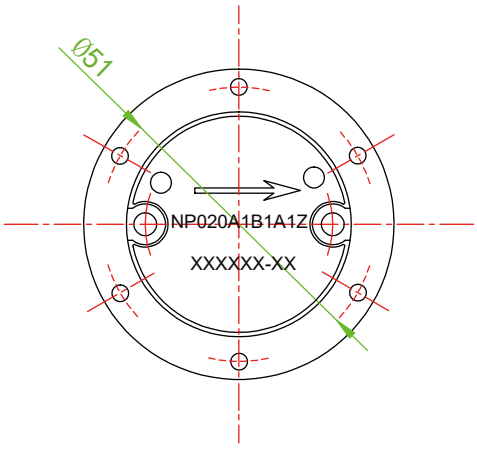

Model	NP020	NP039	NP060	NP070
A(mm)	31.1	34.3	37.7	39.5

suofu 索富
Shanghai Super Fluid Industrial CO.,LTD.

Add Room 723,No 1855,Caoan Road, Jiading district, Shanghai
Web site www.s-fluid.com
Tel +86-13764319509 +86-21-69002556
Email lqx@s-fluid.com

suofu 索 富
Your faithful partner

NP-51 SERIES APECIFICATIONS

-Shanghai Super Fluid Industrial Co.,Ltd-

51 SERIES INCLUDES NP020, NP070, NP170, NP190

51NP series micro magnetic gear pump only has O-ring static seals, and there is no leak-prone dynamic seals. Gears and bearings are in special reinforced PEEK,while shaftsare in high-precision ceramic. One-step injection-molded gears, and special gear style designs with independent intellectual property rights to guarantee that NP series haveultra-long service life and abrasion resistance.It is ideal for small-flow, high-pressureandpulseless applications requiring excellent chemical and abrasion resistance.

- **Material**: Pump Body: SS316 stainless steel/ Hastelloy® /Other Alloys/Special Plastics
  Gear: High-quality and specially filled PEEK /ceramics (optional)
  Magnetic Drive: Rare-earth elements entirely enclosed by PPS
  Bearing: Specially filled PEEK (one-step injection molded)
  Shaft: High-precision zirconia ceramic
  O-ring: Viton®FKM/ EPDM / Polytetrafluoroethylene(PTFE) / FVMQ Rubber / Neoprene(CR) / Indium
- **Gear type**: Spur gear: Better for differential pressure >7bar
  Helical gear: Lower operational noise and fewer pressure pulsatio
- n**Service life**: 20,000+ hours (>10bar)/30,000+hours (<7bar)
- **Inlet filter**: 400 mesh is better
- **Inlet vacuum**: -0.85Bar(related to the motor speed)
- **Differential pressure** : 20Bar(with pure water fluid)
- **Pressure withstanding**: 30Bar
- **Motor**: BLDC/AC/Servo/Stepper motor
- **Operational noise(at a speed of 2000rpm)**: less than 55 dB for spur gears
  less than 45 dB for helical gears
- **Working Speed**: 1~ 4000rpm
- **Fluid temperature**: -85~150℃
- **Dry running time**: 100 hours@1000rpm(Max)
- **Ports**: NPT 1/4",or other customized sizes

PRODUCT PERFORMANCE CURVE（WATER、20℃）

NP100 performance curve

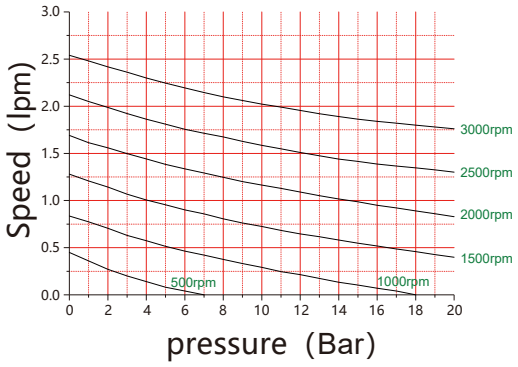

NP120 performance curve

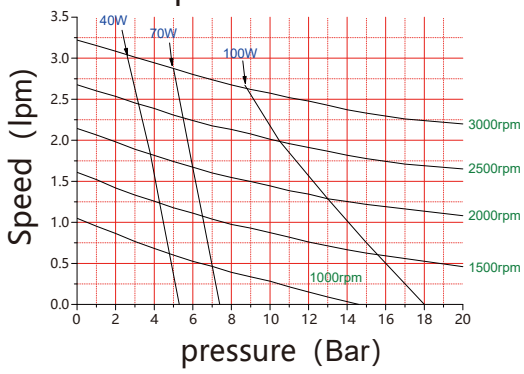

NP170 performance curve

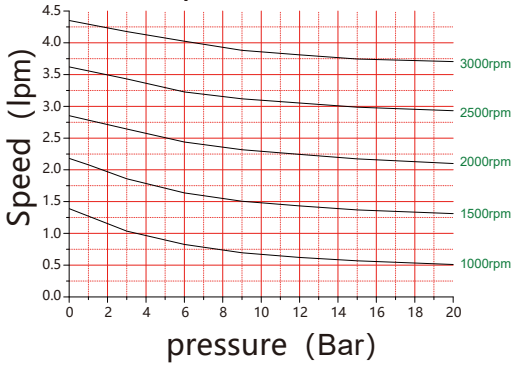

NP190 performance curve

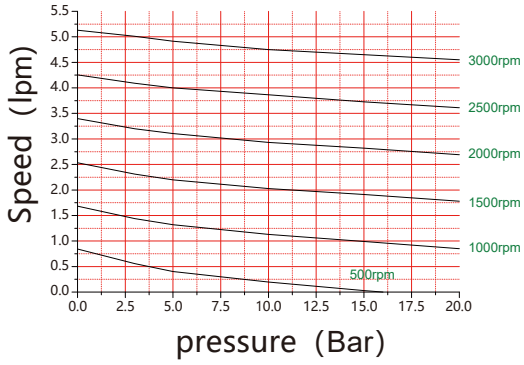

PUMP DIMENSION

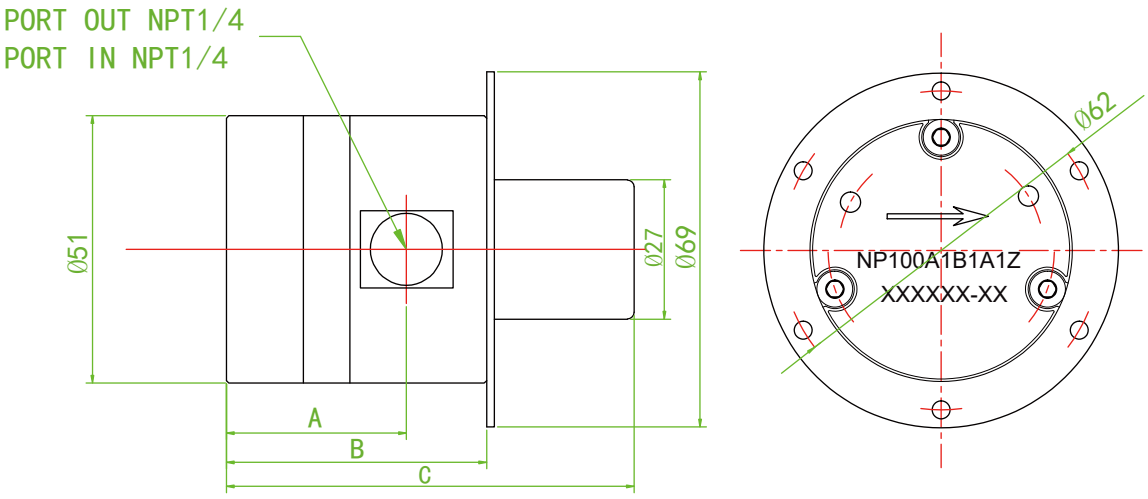

MODEL	NP100	NP120	NP170	NP190
A (mm)	35	37	46.6	48.6
B (mm)	50.6	50.6	62.2	62.2
C (mm)	79.3	79.3	90.9	90.9

suofu 索富
Shanghai Super Fluid Industrial CO.,LTD.

Add Room 723,No 1855,Caoan Road, Jiading district, Shanghai
Web site www.s-fluid.com
Tel +86-13764319509 +86-21-69002556
Email lqx@s-fluid.com

suofu 索 富
Your faithful partner

NP-60 SERIES APECIFICATIONS

-Shanghai Super Fluid Industrial Co.,Ltd-

60 SERIES INCLUDES NP240, NP350

60 NP series micro magnetic gear pump only has O-ring static seals, and there is no leak-prone dynamic seals. Gears and bearings are in special reinforced PEEK,while shafts are in high-precision ceramic. One-step injection-molded gears, and special gear style designs with independent intellectual property rights to guarantee that NP series haveultra-long service life and abrasion resistance.It is ideal for small-flow, high -pressure and pulseless applications requiring excellent chemical and abrasion resistance.

- **Material**: Pump Body: SS316 stainless steel/ Hastelloy® /Other Alloys/Special Plastics
  Gear: High-quality and specially filled PEEK /ceramics (optional)
  Magnetic Drive: Rare-earth elements entirely enclosed by PPS
  Bearing: Specially filled PEEK (one-step injection molded)
  Shaft: High-precision zirconia ceramic
  O-ring: Viton®/ EPDM / Polytetrafluoroethylene(PTFE) / FVMQ Rubber / Neoprene(CR) / Indium
- **Service life**: 20,000+ hours (>10bar)/30,000+ hours (<10bar)
- **Inlet filter**: 400 mesh is better
- **Inlet vacuum**: -0.85Bar(related to the motor speed)
- **Differential pressure**: 20Bar(with pure water fluid) standard and 30bar as require
- **Pressure withstanding**: 30Bar
- **Motor**: BLDC/AC/Servo/Stepper motor
- **Operational noise(at a speed of 2000rpm)**: less than 64dB
- **Working Speed**: 1~4000rpm
- **Fluid temperature**: -85~150℃
- **Dry running time**: 10 minutes@1000rpm(Max)
- **Ports**: NPT 3/8",or other customized sizes

PRODUCT PERFORMANCE CURVE（WATER、20℃）

NP240 performance curve

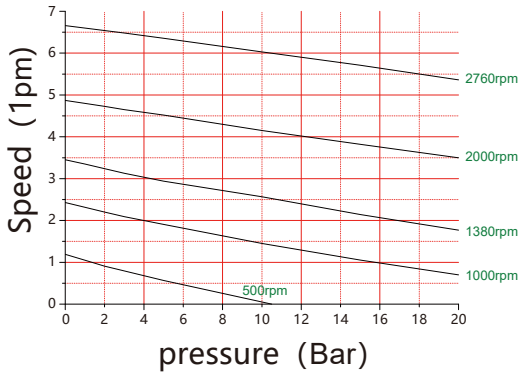

NP350 performance curve

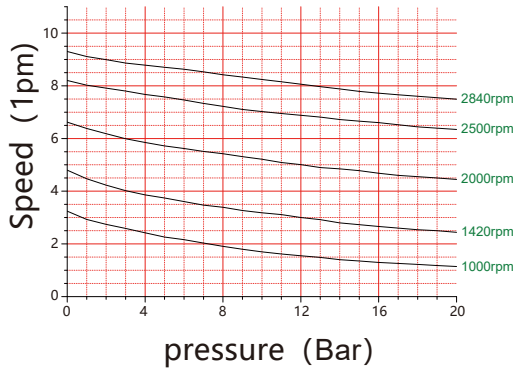

PUMP DIMENSION

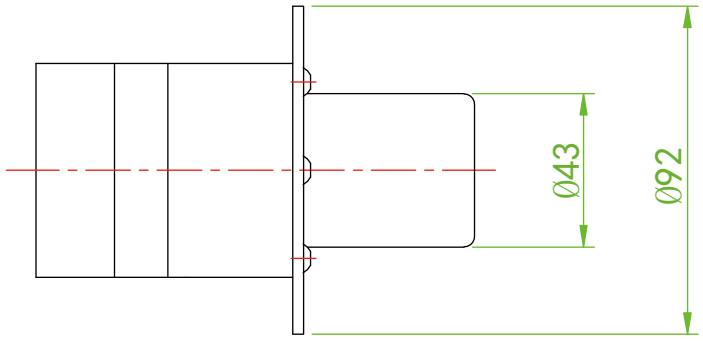

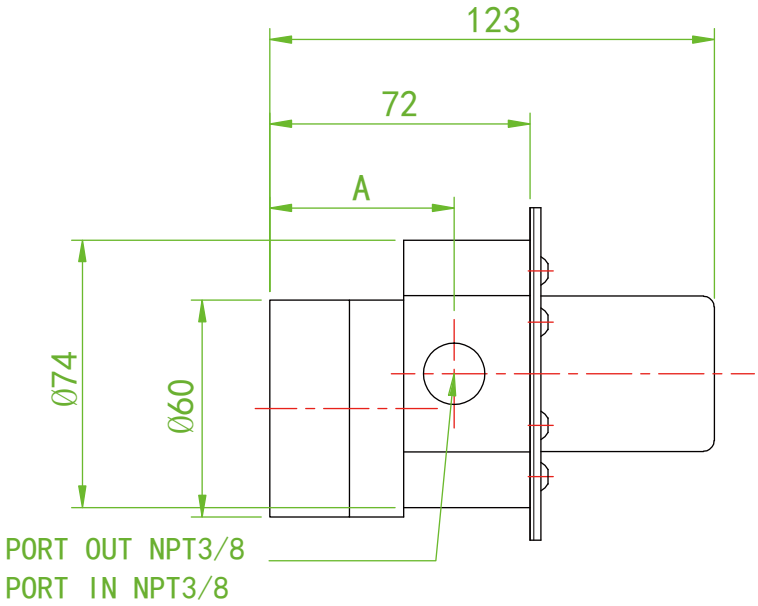

Model	NP240	NP350
A（mm）	51	56

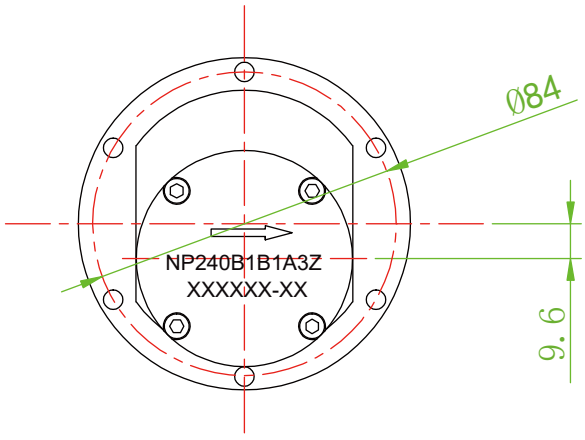

suofu 索富
Shanghai Super Fluid Industrial CO.,LTD.

Add Room 723,No 1855,Caoan Road, Jiading district, Shanghai
Web site www.s-fluid.com
Tel +86-13764319509 +86-21-69002556
Email lqx@s-fluid.com

suofu 索 富
Your faithful partner

NP-98 SERIES APECIFICATIONS

-Shanghai Super Fluid Industrial Co.,Ltd-

98 series includes NP400, NP600, NP900, NP1200, NP1700

98 NP series micro magnetic gear pump only has O-ring static seals, and there is no leak-prone dynamic seals. Gears and bearings are in special reinforced PEEK,while shafts are in high-precision ceramic. One-step injection-molded gears, and special gear style designs with independent intellectual property rights to guarantee that NP series haveultra-long service life and abrasion resistance.It is ideal for small-flow, high-pressure and pulseless applications requiring excellent chemical and abrasion resistance.

- **Material**: Pump Body: SS316 stainless steel/ Hastelloy® /Other Alloys/Special Plastics
  Gear: High-quality and specially filled PEEK /ceramics (optional)
  Magnetic Drive: Rare-earth elements entirely enclosed by PPS
  Bearing: Specially filled PEEK (one-step injection molded)
  Shaft: High-precision zirconia ceramic
  O-ring: FKM/ EPDM Rubber / Polytetrafluoroethylene(PTFE) / FVMQ Rubber / Neoprene(CR) / Indium
- **Service life**: 20,000+ hours (>10bar)/30,000+ hours (<10bar)
- **Inlet filter**: 400 mesh is better
- **Inlet vacuum**: -0.85Bar(related to the motor speed)
- **Differential pressure**: 20Bar(with pure water fluid) standard and 30bar as require
- **Pressure withstanding**: 40Bar
- **Motor**: BLDC/AC/Servo/Stepper motor
- **Operational noise(at a speed of 2000rpm)**: less than 65dB
- **Working Speed**: 1~4000rpm
- **Acceptable fluid temperature**: -85~150℃
- **Dry running time**: 10 minutes@1000rpm(Max)
- **Ports**: NPT 3/8", NPT 3/4", or other customized sizes

PRODUCT PERFORMANCE CURVE（WATER、20°C）

NP400 performance curve

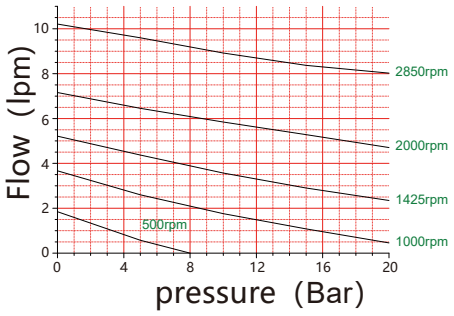

NP600 performance curve

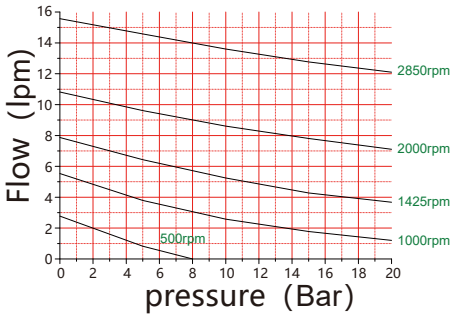

NP900 performance curve

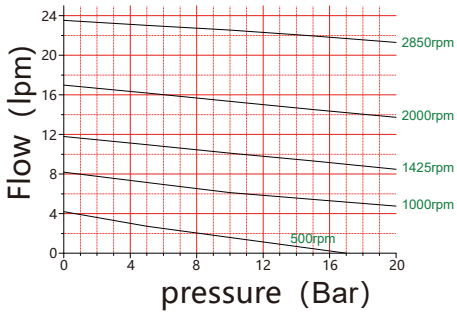

NP1200 performance curve

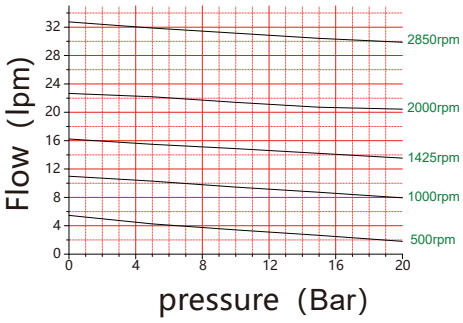

NP1700 performance curve

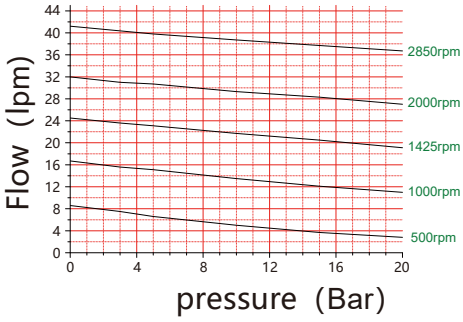

PUMP DIMENSION

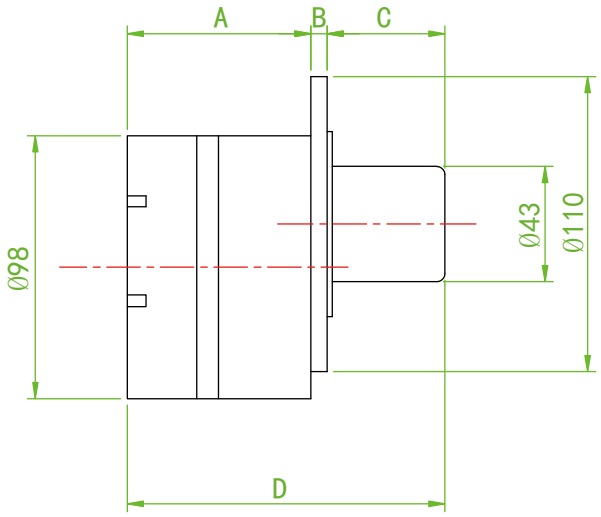

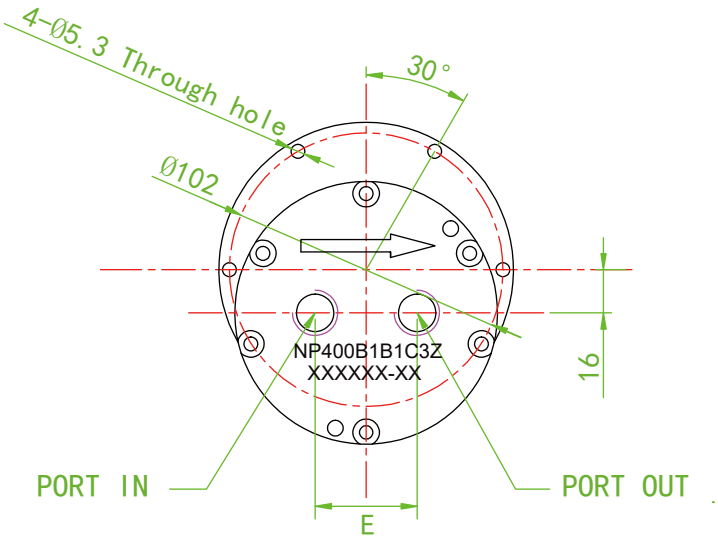

Model	NP400	NP600	NP900	NP1200	NP1700
A (mm)	68.5	68.5	90.5	90.5	90.5
B (mm)	6	7	7	7	7
C (mm)	44	42	42	42	42
D (mm)	118.5	117.5	139.5	139.5	139.5
E (mm)	38	38	46	46	46

Model	NP400	NP600	NP900	NP1200	NP1700
port in	NPT3/8	NPT3/8	NPT3/4	NPT3/4	NPT3/4
port out	NPT3/8	NPT3/8	NPT3/4	NPT3/4	NPT3/4

Suofu 索富
Shanghai Super Fluid Industrial CO.,LTD.

Add Room 723,No 1855,Caoan Road, Jiading district, Shanghai
Web site www.s-fluid.com
Tel +86-13764319509 +86-21-69002556
Email lqx@s-fluid.com

suofu 索 富
Your faithful partner

NP-106 SERIES APECIFICATIONS

-Shanghai Super Fluid Industrial Co.,Ltd-

106 series includes NP2600

106 NP series micro magnetic gear pump only has O-ring static seals, and there is no leak-prone dynamic seals. Gears and bearings are in special reinforced PEEK,while shafts are in high-precision ceramic. One-step injection-molded gears, and special gear style designs with independent intellectual property rights to guarantee that NP series haveultra-long service life and abrasion resistance.It is ideal for small-flow, high-pressure and pulseless applications requiring excellent chemical and abrasion resistance.

- **Material**: Pump Body: SS316 stainless steel/ Hastelloy® /Other Alloys
  Gear: High-quality and specially filled PEEK /ceramics (optional)
  Magnetic Drive: Rare-earth elements entirely enclosed by PPS
  Bearing: Specially filled PEEK (one-step injection molded)
  Shaft: High-precision zirconia ceramic
  O-ring: EPDM/PTFE/FVMQ /CR/In/Viton

- **Service life**: 20,000+ hours (>10bar)/30,000+ hours (<7bar)
- **Inlet filter**: 400 mesh is better
- **Inlet vacuum**: -0.85Bar(related to the motor speed)
- **Differential pressure**: 20Bar(with pure water fluid) standard and 30bar as require
- **Pressure withstanding**: 40Bar
- **Motor**: BLDC/AC/Servo/Stepper motor
- **Operational noise(at a speed of 2000rpm)**: less than 75dB
- **Working Speed**: 1~4000rpm
- **Acceptable fluid temperature**: -120~150℃
- **Dry running time**: 100 hours@1000rpm(Max)
- **Ports**: NPT 1", or other customized sizes

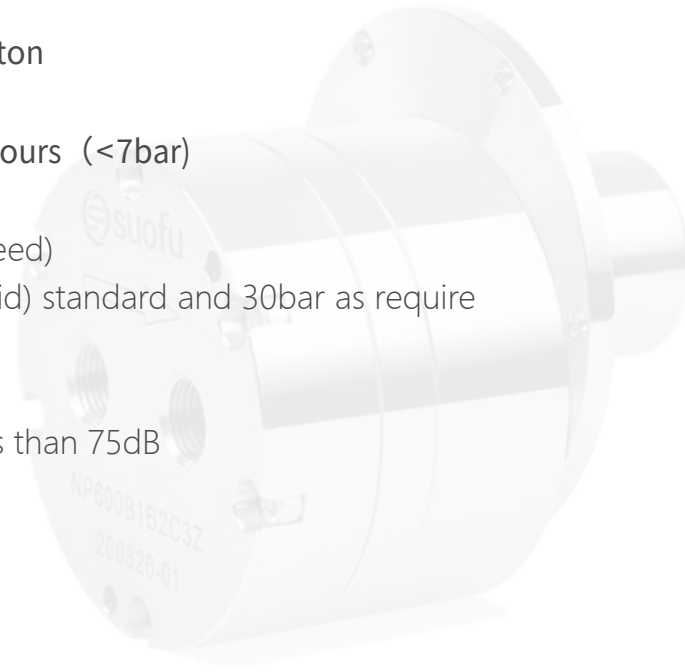

PRODUCT PERFORMANCE CURVE（WATER、20℃）

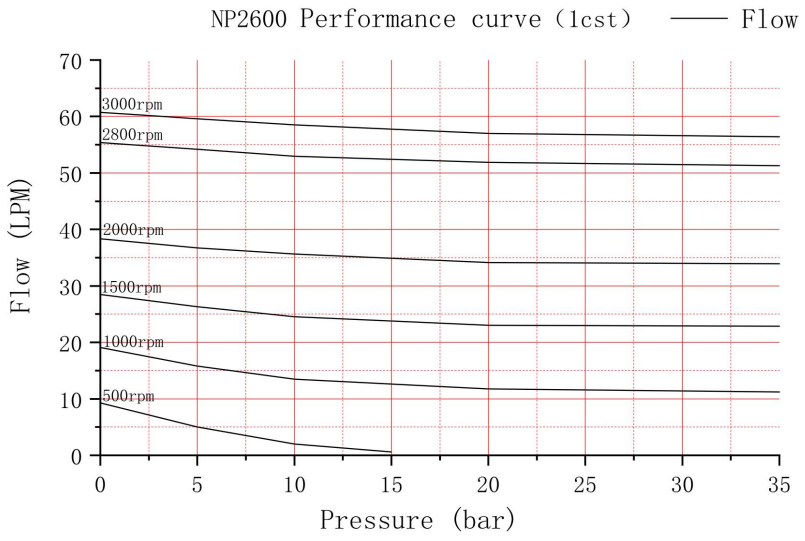

PUMP DIMENSION

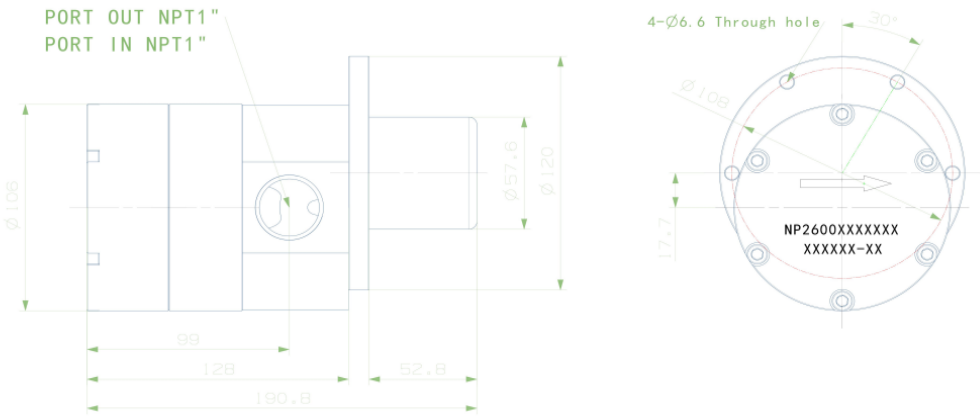

Model	NP2600
port in	NPT1
port ou	NPT1

Suofu 索 富
Shanghai Super Fluid Industrial CO.,LTD.
Add Room 723,No 1855,Caoan Road, Jiading district, Shanghai
Web site www.s-fluid.com
Tel +86-13764319509 +86-21-69002556
Email lqx@s-fluid.com

suofu 索 富

Shanghai Super Fluid Industrial CO.,LTD.

Add	Room 723,No 1855,Caoan Road, Jiading district, Shanghai
Web site	www.s-fluid.com
Tel	+86-13764319509 +86-21-69002556
Email	lqx@s-fluid.com